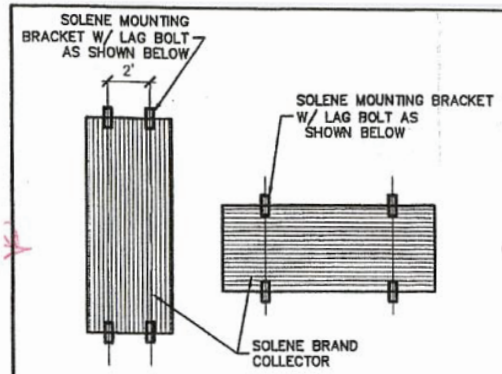

1 S-3 PLAN OF COLLECTORS
SCALE: 3/16"=1'-0"

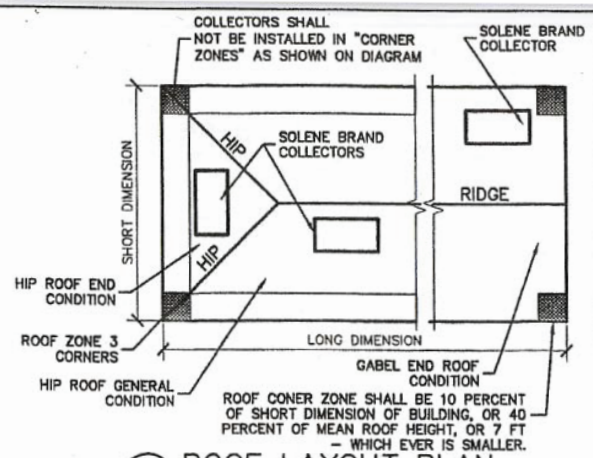

2 S-3 ROOF LAYOUT PLAN
SCALE: NONE

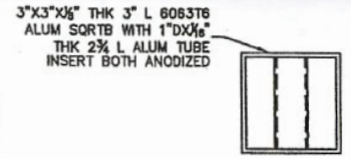

8 S-3 SOLENE BRAND FLUSH MOUNT STAND OFF ASSY
SCALE: NTS

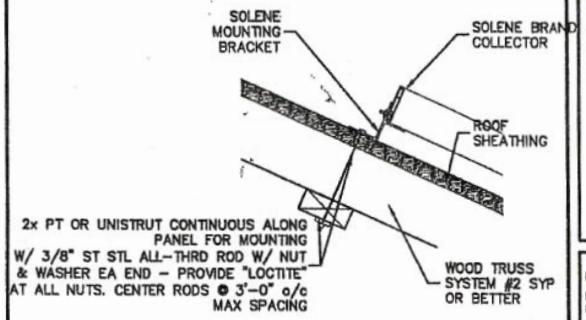

7 S-3 MISSED TRUSS SOLENE BRAND SPANNER INSTALL
SCALE: NTS

GENERAL NOTES:

1. COLLECTOR CONNECTIONS SHOWN HAVE BEEN DESIGNED TO RESIST WIND LOADS OUTLINED IN THE 2004 BUILDING CODE, WITH 2006 SUPPLEMENTS, CHAPTER 16 FOR 140 MPH EXPOSURE "C" WIND VELOCITY AND PER ASCE 7-02, CHAPTER 6.0 FOR 140 MPH EXPOSURE "C" WIND VELOCITY TYPICALLY.
2. LAG BOLT CAPACITIES AND EMBEDMENTS ARE BASED UPON "NATIONAL DESIGN SPECIFICATION FOR STRESS GRADE LUMBER AND FASTENINGS" AS PUBLISHED BY THE NATIONAL FOREST PRODUCTS ASSOCIATION.
3. ALL CONNECTIONS ARE FOR ROOFS 0° TO 45° MAX SLOPE CONDITIONS.
4. ALL CONNECTORS ARE FOR MEAN ROOF HEIGHTS NOT TO EXCEED 30'-0".
5. APPLY ROOF GRADE SEALANT TO ALL CONTACT SURFACES.
6. ALTERNATIVELY SOLENE MOUNTING BRACKET CAN BE FASTENED TO THE SOLENE COLLECTOR WITH EITHER (1) 3/8" STSTL BOLT AND NUT, OR (2) 1/4" SELF TAPPING SHEET METAL SCREWS.

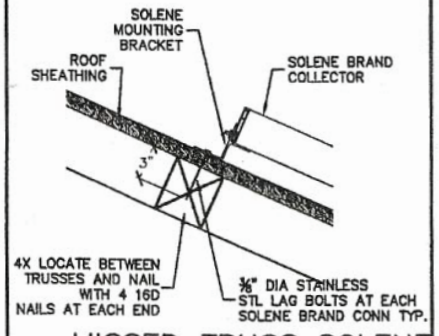

3 S-3 MISSED TRUSS SOLENE BRAND NAILER INST.
SCALE: 1-1/2"=1'-0"

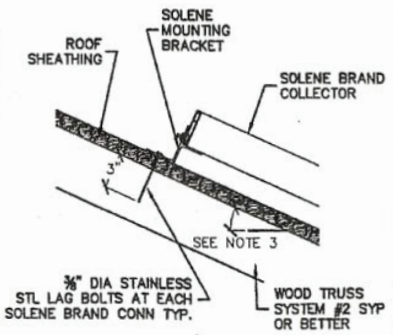

4 S-3 SHINGLE/METAL BUILT UP ROOF
SCALE: 1-1/2"=1'-0"

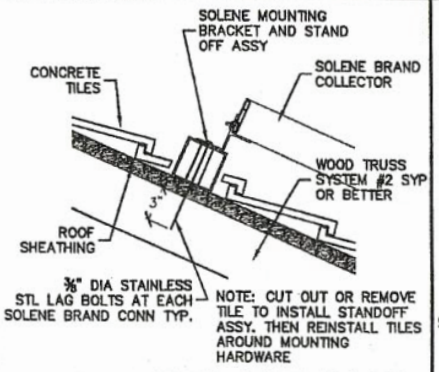

5 S-3 BARREL TILE ROOF
SCALE: 1-1/2"=1'-0"

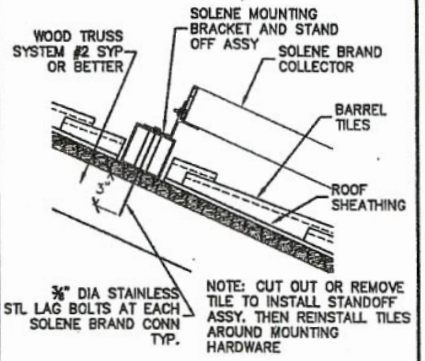

6 S-3 FLAT TILE ROOF
SCALE: 1-1/2"=1'-0"

JUL 12 2007

ANCHORING OF THE "SOLENE" BRAND COLLECTORS

PER 2004 FLORIDA BULDING CODE AND ASCE 7-02

RC ENGINEERING, LLC.
2281 CREST RIDGE COURT
SANFORD, FL 32771
TEL/ 407-474-[illegible] FAX/ 407-[illegible]
ERNOCRATES R. CASTILLO - FLA. P.E. 5200

PROJECT #: 60136
DESIGNED: REC
SCALE: NOTED

DRAWING NO. S-3
SHEET 1 OF 1